ГК Атлант Инжиниринг – официальный представитель в РФ и СНГ
+7 (495) 109-02-08 sales@bbrc.ru www.bbrc.ru

NOTES:

1. MATERIALS AND FINISHES:
   BODY - BRASS, NICKEL PLATING
   CONTACT - BERYLLIUM COPPER, GOLD PLATING
   INSULATOR - PTFE, NATURAL
   INSULATOR DISC - ULTEM 1000, NATURAL
   FERRULE - COPPER, NICKEL PLATING

2. ELECTRICAL:
   A. IMPEDANCE: 50 OHM
   B. FREQUENCY RANGE: DC-12.4 GHz
   C. VSWR (RETURN LOSS): 1.20 (-20dB) MAX. DC-12.4 GHz
   D. DIELECTRIC WITHSTANDING VOLTAGE: 500 VRMS, MIN.

3. MECHANICAL:
   A. DURABILITY: 500 CYCLES MIN.
   B. TEMPERATURE RANGE: -40°C to +155°C

4. PACKAGING:
   A. QUANTITY: SINGLE PACK
   B. MARKING: BAG TO BE MARKED
      "AMPHENOL RF, 901-10606, DATE CODE"

5. MAX. PANEL THICKNESS: 3.2 mm.

6. CABLE ASSEMBLY INSTRUCTIONS:
   A. TRIM CABLE AS SHOWN, TAKING CARE TO NOT DAMAGE THE FOIL.
   B. SLIDE INSULATOR DISC, FERRULE AND HEAT SHRINK TUBE ONTO CABLE
   C. SOLDER CONTACT TO CABLE CENTER CONDUCTOR
   D. INSERT CABLE AND CONTACT INTO CONNECTOR. FOIL IS A SLIP FIT INTO Ø1.75 BODY DIAMETER
   E. CRIMP FERRULE WITH .128" HEX

7 SHOW CABLE ENTRY DIMENSIONS

THIRD ANGLE PROJ.

REVISIONS				
REV	DESCRIPTION	DATE	ECO	APPR
A	RELEASE TO MANUFACTURING	07-May-19	11442	CJV

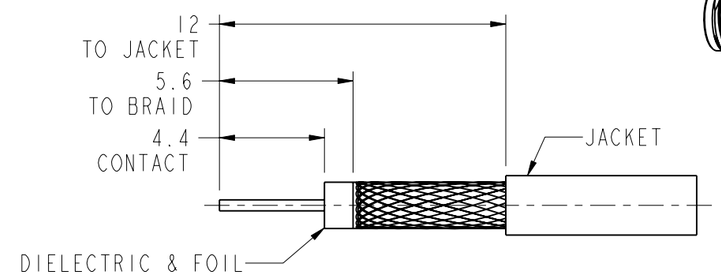

RECOMMENDED
CABLE STRIPPING DIM'S

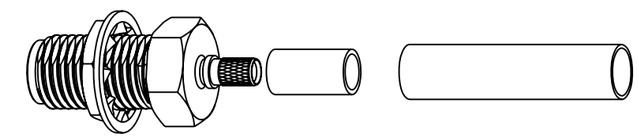

SCALE 2.000

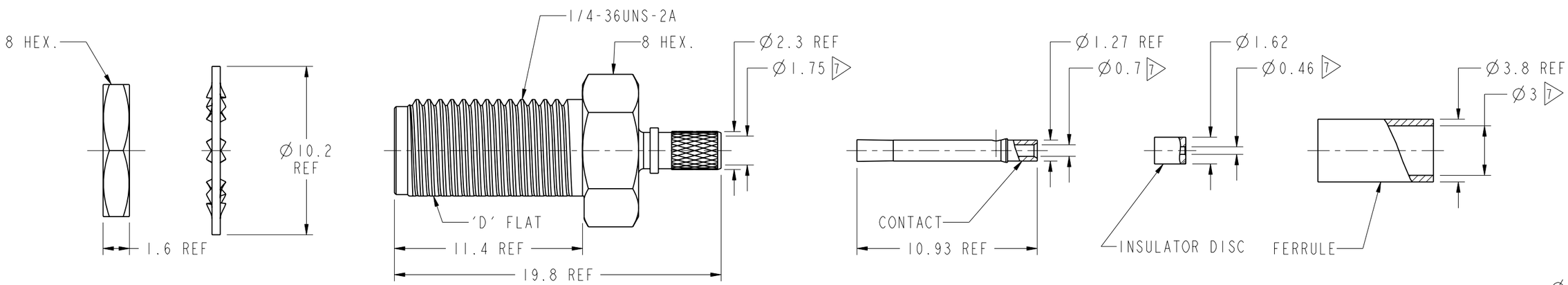

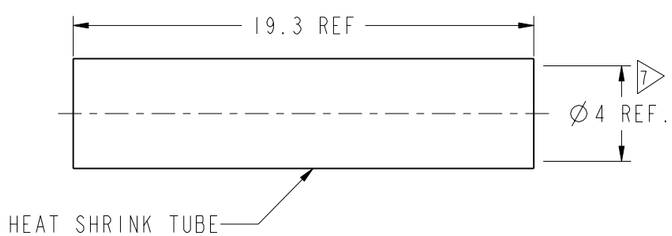

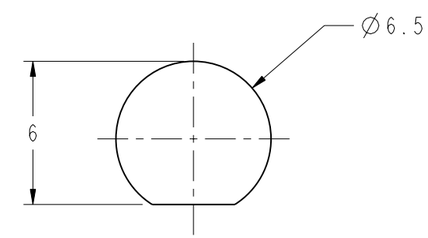

RECOMMENDED
MOUNTING HOLE

CUSTOMER OUTLINE DRAWING

ALL OTHER SHEETS ARE FOR INTERNAL USE ONLY

UNLESS OTHERWISE SPECIFIED, DIMENSIONS ARE IN METRIC AND TOLERANCES ARE:

<0.5mm	0.5 - 6mm	6 - 30mm	30 - 120mm	ANGLES
± 0.05mm	±0.1mm	±0.2mm	± 0.3mm	±1°

NOTICE - These drawings, specifications, or other data (1) are, and remain the property of Amphenol corp. (2) must be returned upon request; and (3) are confidential and not to be disclosed to any person other than those to whom they are given by Amphenol Corp. the furnishing of these drawings, specifications, or other data by Amphenol Corp., or to any other person to anyone for any purpose is not to be regarded by implication or otherwise in any manner licensing, granting rights to permitting such holder or any other person to manufacture, use or sell any product, process or design, patented or otherwise, that may in any way be related to or disclosed by said drawings, specifications, or other data.

MATERIAL SEE NOTES	DRAWN W.ZENG	DATE 9-May-19
	ENGINEER S.DUAN	DATE 17-May-19
REFERENCE EAR 7994	APPROVED S.HSIEH	DATE 20-May-19
CONFIGURATION LEVEL:	CAD FILE	
FINISH		

TITLE
SMA BULKHEAD CRIMP JACK WITH LMR-100A CABLE

SCALE: 4.0:1.0 | SHEET 2 OF 2

DWG SIZE B | REV A

Amphenol RF
www.amphenolrf.com

DRAWING NO. 901-10606
ITEM NO. 901-10606
PART NO. 901-10606