ГК Атлант Инжиниринг – официальный представитель в РФ и СНГ
+7 (495) 109-02-08 sales@bbrc.ru www.bbrc.ru

NOTES:

1. MATERIALS AND FINISHES:
   BODY - BRASS, NICKEL PLATING
   CONTACT - BeCu, GOLD PLATING
   INSULATORS - PTFE, NATURAL
   CLIP - PBT, NATURAL
   LOCKCOVER - NYLON 66
   FERRULE - COPPER, NICKEL PLATED
   RETAINING RING - BeCu
2. ELECTRICAL:
   A. IMPEDANCE: 50 OHM, NOMINAL
3. MECHANICAL:
   A. DURABILITY: 100 CYCLES MIN.
   B. TEMPERATURE RANGE: -40°C TO +115°C
4. PACKAGING:
   A. QUANTITY: TRAY PACK
   B. MARKING: TRAY TO BE MARKED
      "AMPHENOL RF, FAI-NXSJ-C01-6, AND DATE CODE"
5. A. CRIMPED CONTACT PIN AFM8 ADJUST TO 4 POSITIONER K727
   B. CRIMPED FERRULE HEX CRIMP SIZE 0.128"

THIRD ANGLE PROJ.

REVISIONS				
REV	DESCRIPTION	DATE	ECO	APPR
F	REDRAWN IN PRO-E & COD ADDED	4/29/14	49831	KR/BCG

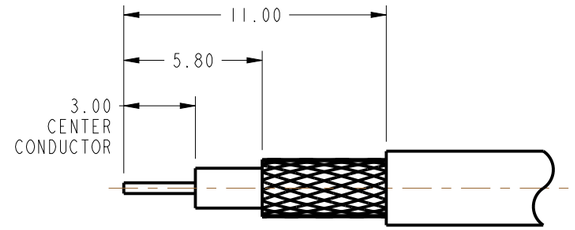

RECOMMENDED CABLE STRIPPING DIMENSIONS

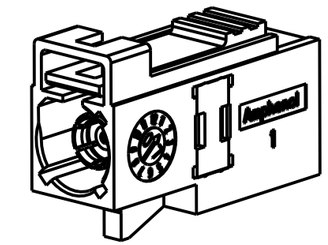

SCALE 2.000

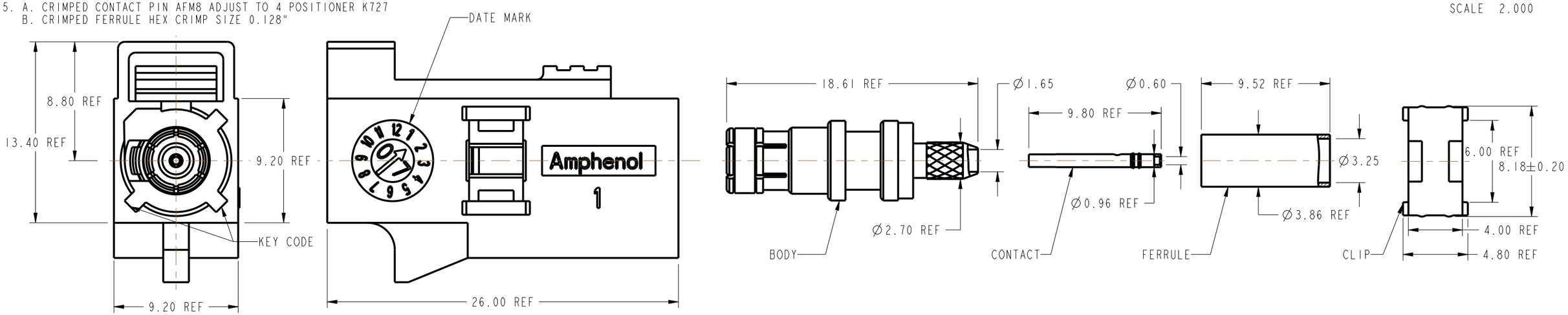

KEY CODING	PART NO.	DRAWING NO.	ITEM NO
A	FAI-NASJ-C01-6	FK61210AW-005-NT30G-50	FK61210ACA36NC5F
B	FAI-NBSJ-C01-6	FK61210BW-005-NT30G-50	FK61210ACB36NC5F
C	FAI-NCSJ-C01-6	FK61210CW-005-NT30G-50	FK61210ACC36NC5F
D	FAI-NDSJ-C01-6	FK61210DW-005-NT30G-50	FK61210ACD36NC5F
E	FAI-NESJ-C01-6	FK61210EW-005-NT30G-50	FK61210ACE36NC5F
F	FAI-NFSJ-C01-6	FK61210FW-005-NT30G-50	FK61210ACF36NC5F
G	FAI-NGSJ-C01-6	FK61210GW-005-NT30G-50	FK61210ACG36NC5F
H	FAI-NHSJ-C01-6	FK61210HW-005-NT30G-50	FK61210ACH36NC5F
I	FAI-NISJ-C01-6	FK61210IW-005-NT30G-50	FK61210ACI36NC5F
K	FAI-NKSK-C01-6	FK61210KW-005-NT30G-50	FK61210ACK36NC5F
Z	FAI-NZSJ-C01-6	FK61210ZW-005-NT30G-50	FK61210ACZ36NC5F
L	FAI-NLSJ-C01-6	FK61210LW-005-NT30G-50	FK61210ACL36NC5F
M	FAI-NMSJ-C01-6	FK61210MW-005-NT30G-50	FK61210ACM36NC5F
N	FAI-NNSJ-C01-6	FK61210NW-005-NT30G-50	FK61210ACN36NC5F

CONFIGURATION CONTROL:
NO CHANGES PERMITTED TO DRAWING WITHOUT PPAP QUALIFIED CUSTOMER APPROVAL

CUSTOMER OUTLINE DRAWING

ALL OTHER SHEETS ARE FOR INTERNAL USE ONLY

UNLESS OTHERWISE SPECIFIED, DIMENSIONS ARE IN METRIC AND TOLERANCES ARE:

<0.5mm	0.5 - 6mm	6 - 30mm	30 - 120mm	ANGLES
± 0.05mm	±0.1mm	±0.2mm	± 0.3mm	±1°

NOTICE - These drawings, specifications, or other data (1) are, and remain the property of Amphenol corp. (2) must be returned upon request; and (3) are confidential and not to be disclosed to any person other than those to whom they are given by Amphenol Corp. the furnishing of these drawings, specifications, or other data by Amphenol Corp., or to any other person to anyone for any purpose is not to be regarded by implication or otherwise in any manner licensing, granting rights to permitting such holder or any other person to manufacture, use or sell any product, process or design, patented or otherwise, that may in any way be related to or disclosed by said drawings, specifications, or other data.

MATERIAL: SEE NOTES

REFERENCE
EAR #

CONFIGURATION LEVEL: In Work

FINISH

DRAWN KARTHIK R	DATE 17-Dec-13
ENGINEER B.C. GLEISSNER	DATE 15-Dec-13
APPROVED K. CAPOZZI	DATE 4/29/14
CAD FILE	

TITLE
FAKRA 180° CLIP SMB CRIMP JACK FOR RG-174/U,-188A/U, AND -316/U CABLE

SCALE: 3.5:1.0 | SHEET 2 OF 2

DWG SIZE: B | REV: F

Amphenol RF
www.amphenolrf.com

DRAWING NO. FK61210XX-005-NT30G-50
ITEM NO. FK61210ACX36NC5F
PART NO. FAI-NXSJ-C01-6