ГК Атлант Инжиниринг – официальный представитель в РФ и СНГ
+7 (495) 109-02-08 sales@bbrc.ru www.bbrc.ru

NOTES:
1. MATERIALS AND FINISHES:
   SHELL -STAINLESS STEEL(SUS-316L), Au(.03μm MIN) OVER Ni(1~5μm) PLATING.
   A-PIN(MOVING) -BeCu(C1720R-1/2HM), Au(.2μm MIN) OVER Ni(1~5μM) PLATING.
   B-PIN(FIXED) -PHOSPHORUS BRONZE(C5210R-1/2H), Au(.2μm MIN) OVER Ni(1~5μm)
   MOLD -PA9T
2. ELECTRICAL:
   A. IMPEDANCE: 50Ω
   B. FREQUENCY RANGE: DC-3GHz
   C. VSWR(RETURN LOSS): 1.6 MAX.
   D. DIELECTRIC WITHSTANDING VOLTAGE: 1 MIN. AC500V VRMS.
3. MECHANICAL:
   A. DURABILITY: 5000 TIMES.
   B. TEMPERATURE RANGE: -35°C TO 85°C
4. PACKAGING: TAPE & REEL

THIRD ANGLE PROJ.

REVISIONS				
REV	DESCRIPTION	DATE	ECO	APPR
A	RELEASE TO MFG	3/22/07	46453	HP

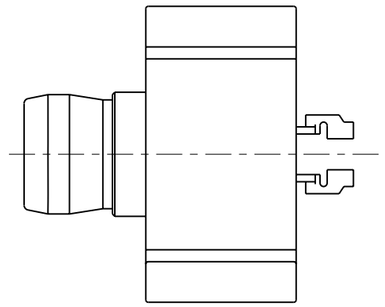

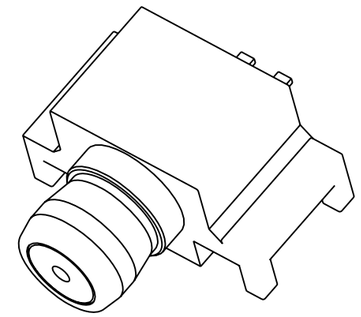

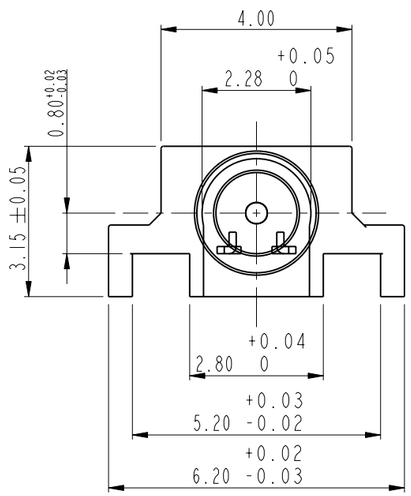

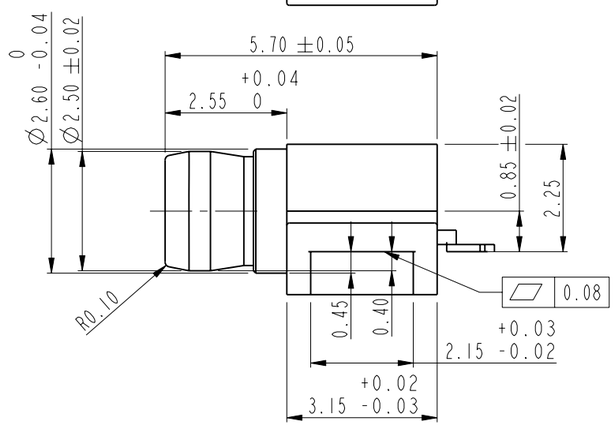

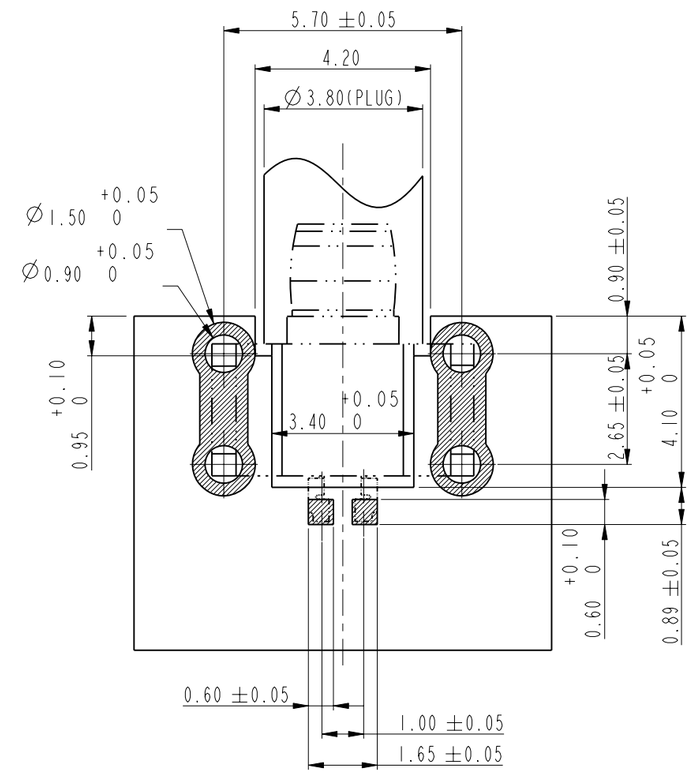

PCB LAY-OUT

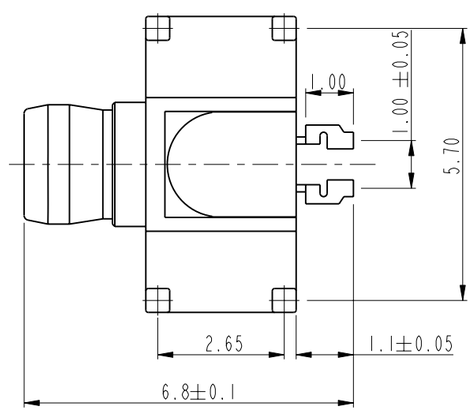

NOTE:
1. COPLANARITY: MAX. 0.1
2. RF SWITCH CIRCUIT DIAGRAM:

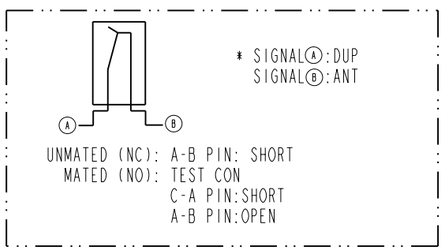

METRIC DRAWING

CUSTOMER OUTLINE DRAWING
ALL OTHER SHEETS ARE FOR INTERNAL USE ONLY

UNLESS OTHERWISE SPECIFIED, DIMENSIONS ARE METRIC AND TOLERANCES ARE:
1 PLACE DECIMAL ± 0.3MM (.012") | 2 PLACE DECIMAL ± .10 MM (.004") | ANGLES ± 1°

NOTICE - These drawings, specifications, or other data (1) are, and remain the property of Amphenol corp. (2) must be returned upon requiest; and (3) arre confidential and not to be disclosed to any person other than those to whom they are given by Amphenol Corp. the funishing of these drawings, specifications, or other data by Amphenol Corp., or to any other person to anyone for any purpose is not to be regarded by implicatioin or otherwise in any manner licensing, granting rights to permitting such holder or any other sperson to manufacture, use or sell any product, process or design, patented or otherwsie, that may in any way be related to or disclosed by said drawings, specifications, or other data.

MATERIAL	DRAWN PRAVEEN N.B.	DATE 16-Feb-07	TITLE ASSEMBLY RF SWITCH, SMT
	ENGINEER PRAVEEN N.B.	DATE 16-Feb-07	
REFERENCE EAR # AND	APPROVED O. BARTHELMES	DATE 3/22/07	SCALE: 8.0:1.0 / SHEET 1 OF 1
CONFIGURATION LEVEL: Released	CAD FILE Root Folder/Switch/902-9042		DWG SIZE B / CODE ID 74868 / REV A
FINISH			

Amphenol RF
Danbury CT USA, Tainan, Taiwan, Shenzhen, China
www.amphenolrf.com

DRAWING NO.
ITEM NO.
PART NO. 902-9042