ROHS COMPLIANT

PRODUCT DATA DRAWING

REVISION HISTORY			
REV	DESCRIPTION	DATE	APPROVED
-	REL. NRN 40359	03/17/16	STW
A	DCN 46776	10/10	STW

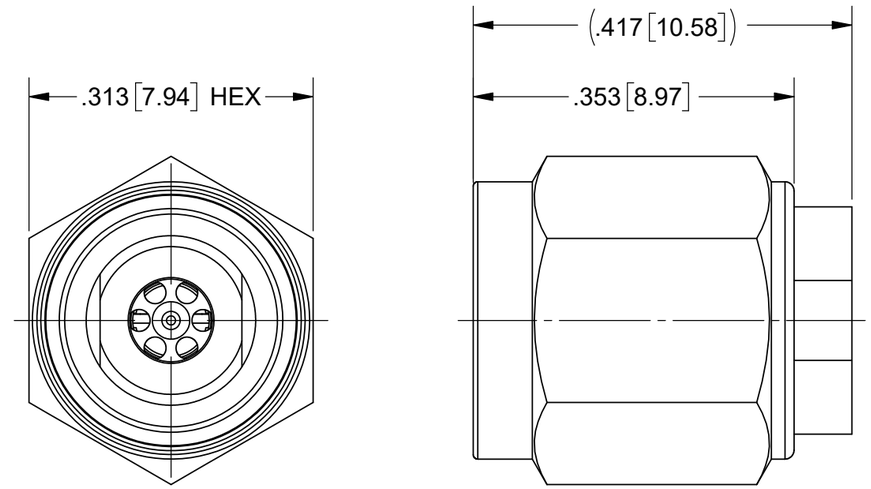

MATERIAL:

BODY, CAP, SLEEVE & COUPLING NUT: STAINLESS STEEL PER AMS-5640, ALLOY UNS S30300, TYPE 1

LOCK RING: BERYLLIUM COPPER PER ASTM B196, ALLOY No. UNS C17300, TD04

SLEEVE (CHIP) & CONTACT: BRASS PER ASTM B16, ALLOY UNS No. C36000

BELLOWS SPRING: ELECTRO DEPOSITED NICKEL: GOLD PLATED

INSULATOR: ULTEM 1000 PER ASTM D5205

GASKET: SILICONE RUBBER PER A-A-59588, CLASS 2B, GRADE 50/60

RESISTOR ELEMENT: ALUMINUM NITRIDE SUBSTRATE WITH TANTALUM NITRIDE RESISTOR: GOLD PLATED TERMINATIONS

FINISH:

BODY, CAP, COUPLING NUT & SLEEVE (BODY): PASSIVATED PER AMS-2700, TYPE II.

CONTACT: GOLD PER ASTM B488, TYPE I, CODE C, CLASS .5, OVER NICKEL PER AMS-QQ-N-290, CLASS 1, .00005" MIN.

SLEEVE (CHIP): GOLD PER ASTM B488, TYPE II, CODE C, CLASS 1.52, OVER NICKEL PER AMS-QQ-N-290, CLASS 1, .00010" MIN

PERFORMANCE:

IMPEDANCE: 50 OHMS
FREQ. RANGE: DC TO 50.0 GHz
VSWR: 1.30:1 DC TO 50.0 GHz
OPERATING TEMP.: -65˚C TO +125˚C
AVG. POWER: 1 WATT (POWER INPUT DERATED LINEARLY FROM 25˚C TO 10% OF AVERAGE AT 125˚C)
PEAK POWER: 100 WATTS (PEAK POWER FOR A DUTY CYCLE OF 5X10-4 MAXIMUM PULSE DURATION OF 5 MICROSECONDS)
ENGAGEMENT/ DISENGAGEMENT: 2 IN-LBS

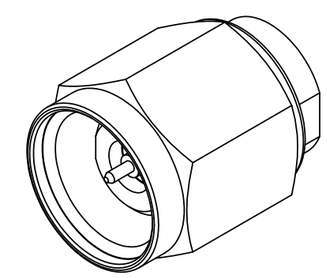

MATERIAL: SEE NOTES
FINISH: SEE NOTES
SURFACE AREA: N/A

PROPRIETARY

THE INFORMATION CONTAINED IN THIS DRAWING IS THE SOLE PROPERTY OF SV MICROWAVE, INC. ANY REPRODUCTION IN PART OR AS A WHOLE WITHOUT THE WRITTEN PERMISSION OF SV MICROWAVE, INC IS PROHIBITED.

DIMENSIONS ARE IN INCHES TOLERANCES:
FRACTIONAL: ±1/64 ANGULAR: X° ±1°0' X°X' ±15'
DECIMAL: .X ±.030 .XX ±.010 .XXX ±.005

INTERPRET DIMENSIONS AND TOLERANCES PER ASME Y14.5M - 1994

THIRD ANGLE PROJECTION

UNLESS OTHERWISE SPECIFIED
1) ALL DIMENSIONS ARE IN INCHES [MILLIMETERS]
2) ALL DIMENSIONS ARE AFTER PLATING.
3) BREAK CORNERS & EDGES .005 R. MAX.
4) CHAM. 1ST & LAST THREADS.
5) SURFACE ROUGHNESS 63 MIL-STD-10.
6) DIA.'S ON COMMON CENTERS TO BE CONCENTRIC WITHIN .005 T.I.R.
7) REMOVE ALL BURRS

DRAWN:	BNK 05/26/15	
CHECKED:	STW 05/26/15	
APPROVED:	STW 05/26/15	

SV Microwave, Inc.
2400 Centrepark West Drive, Suite 100
West Palm Beach, FL 33409

TITLE: 2.4mm, 50 OHM PLUG TERMINATION DC TO 50 GHz

SIZE	CAGE CODE	DWG. NO.
B	95077	SF8016-6404

SCALE: 6:1 SHEET 1 OF 1

Downloaded from Arrow.com.